OMAL S.p.A. Società Benefit
Headquarters: Via Ponte Nuovo 11, Rodengo Saiano (Brescia) Italy
Production site: Via Brognolo 12, Passirano (Brescia) Italy
Ph +39 0308900145 Fax +39 0308900423

Warning: filectime(): stat failed for /var/www/vhost/www.omal.it/htdocs/https://www.omal.it/./FilesProdotti/TA-LUFT.pdf in **/var/www/vhost/www.omal.it/htdocs/prodotto-printable.php** on line **65**

Warning: filectime(): stat failed for /var/www/vhost/www.omal.it/htdocs/https://www.omal.it/./FilesProdotti/RICEVUTADEPOSITOF.T.ATEXN.VS-19.pdf in **/var/www/vhost/www.omal.it/htdocs/prodotto-printable.php** on line **65**

Warning: filectime(): stat failed for /var/www/vhost/www.omal.it/htdocs/https://www.omal.it/./FilesProdotti/Certificate-202053402-OMAL-ValvoleMagnum-Thor-new.pdf in **/var/www/vhost/www.omal.it/htdocs/prodotto-printable.php** on line **65**

Warning: filectime(): stat failed for /var/www/vhost/www.omal.it/htdocs/https://www.omal.it/./FilesProdotti/FG-063579-645FUGITIVEEMISSIONDN25CL.300T1-T2-T3-M1-M4-M5-M6.pdf in **/var/www/vhost/www.omal.it/htdocs/prodotto-printable.php** on line **65**

Warning: filectime(): stat failed for /var/www/vhost/www.omal.it/htdocs/https://www.omal.it/./FilesProdotti/FG-063579-646FUGITIVEEMISSIONDN100CL.300THORT1-T2-T3-M1-M4-M5-M6.pdf in **/var/www/vhost/www.omal.it/htdocs/prodotto-printable.php** on line **65**

Warning: filectime(): stat failed for /var/www/vhost/www.omal.it/htdocs/https://www.omal.it/./FilesProdotti/Certificato-PED-DNV.pdf in **/var/www/vhost/www.omal.it/htdocs/prodotto-printable.php** on line **65**

Warning: filectime(): stat failed for /var/www/vhost/www.omal.it/htdocs/https://www.omal.it/./FilesProdotti/80486-ValvoleasferaATEX-IT-EN.pdf in **/var/www/vhost/www.omal.it/htdocs/prodotto-printable.php** on line **65**

Warning: filectime(): stat failed for /var/www/vhost/www.omal.it/htdocs/https://www.omal.it/./FilesProdotti/UMAH1000-IT-01-21.pdf in **/var/www/vhost/www.omal.it/htdocs/prodotto-printable.php** on line **65**

Warning: filectime(): stat failed for /var/www/vhost/www.omal.it/htdocs/https://www.omal.it/./PdfProdotti/020/Certificati/FIRE SAFE DN 100-200/Thor Split Body - PN 16-40 ANSI 150-300 in acciaio al carbonio - FIRE SAFE DN100-200.pdf in **/var/www/vhost/www.omal.it/htdocs/prodotto-printable.php** on line **65**

Warning: filectime(): stat failed for /var/www/vhost/www.omal.it/htdocs/https://www.omal.it/./PdfProdotti/020/Certificati/FIRE SAFE DN 15-100/Thor Split Body - PN 16-40 ANSI 150-300 in acciaio al carbonio - FIRE SAFE DN15-100.pdf in **/var/www/vhost/www.omal.it/htdocs/prodotto-printable.php** on line **65**

Warning: filectime(): stat failed for /var/www/vhost/www.omal.it/htdocs/https://www.omal.it/./FilesProdotti/80844-35-ValvoleasferaThorSplitBodyT1PN16-40-IT-EN-DE-ES-0522.pdf in **/var/www/vhost/www.omal.it/htdocs/prodotto-printable.php** on line **65**

Warning: filectime(): stat failed for /var/www/vhost/www.omal.it/htdocs/https://www.omal.it/./FilesProdotti/Certificate6D-1007.pdf in **/var/www/vhost/www.omal.it/htdocs/prodotto-printable.php** on line **65**

THOR Split Body ANSI 150-300 reduced bore carbon steel ball valve

Macro Ball valves

Category THOR

Subcategory THOR Split Body

Family THOR Split Body ANSI 150-300 reduced bore

OMAL S.p.A. Società Benefit
Headquarters: Via Ponte Nuovo 11, Rodengo Saiano (Brescia) Italy
Production site: Via Brognolo 12, Passirano (Brescia) Italy
Ph +39 0308900145 Fax +39 0308900423

benefits

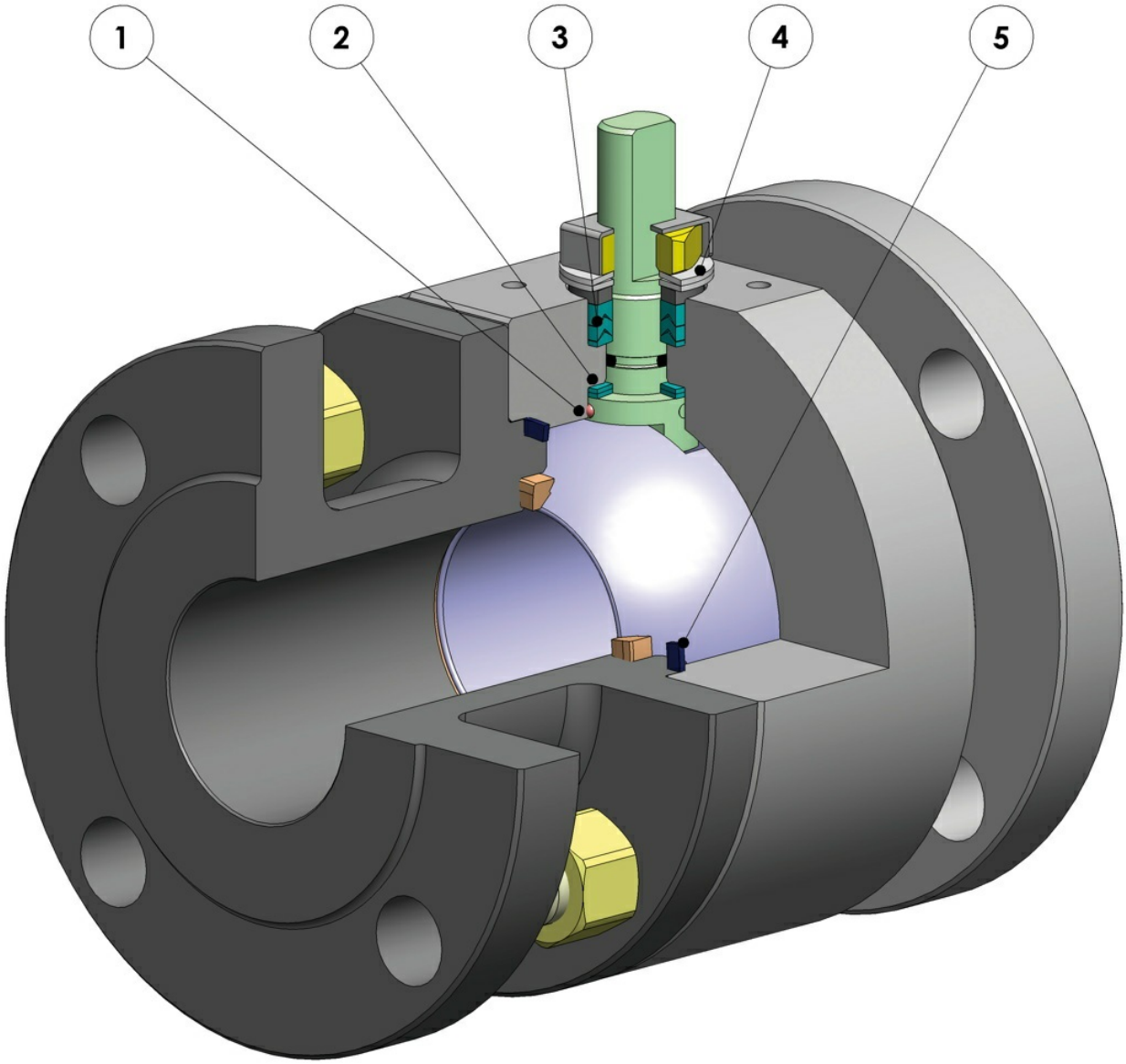

1. Antistatic device (electrical continuity between ball, stem and body)
Static electricity is avoided which can cause sparks and fire in an inflammable/explosive environment
Contact safety throughout the entire life of the valve

2. Double antifriction washer
Less Breakaway Torque is granted
Less wear comparing with the execution with the single washer

3. "V" seals pack; 3 seals + o-ring
It ensures a perfect tightness even after a high number of cycles

4. Spring washer on the shaft seal
Guarantee of the recovery of the gap due to the wear caused by the rotational movement of the shaft avoiding leakage towards the outside part.
Allow to maintain energized the "chevron" seals (V), thus avoiding any leakage to the outside, against huge temperature excursions

5. Stretch Graphite seal
Tightness towards outside is granted, independently by the thermal excursions to which the valve is subjected

Greater precision in the alignment of axes due to a unique positioning in the process machining from raw material to finished valve
Longer lifetime of the valve
Less breakaway torque

Easy maintainance directly on site
Reduced maintainance costs

Valve body in carbon steel made with NACE certified material as standard
Greater corrosion resistance
Greater ductility of the material

100% in- house manufacturing process technology
Maximum control and accuracy in all the stages of the manufacturing process
Flexibility in supply quickly special executions requested by customers

"Fire safe" Certificate
Guarantees the tightness of the valve also in case of fire

ATEX Certificate
Installation is possible in a potential explosive environment

TA LUFT fugitive emission Certificate
High level of safety of the tightness towards the outside is granted

PED Certificate
Full compliance with European Safety Standards for Pressure Equipment

UP to SIL 3 certified
Guarantee of the high level of functional safety

OMAL S.p.A. Società Benefit
Headquarters: Via Ponte Nuovo 11, Rodengo Saiano (Brescia) Italy
Production site: Via Brognolo 12, Passirano (Brescia) Italy
Ph +39 0308900145 Fax +39 0308900423

dimensions

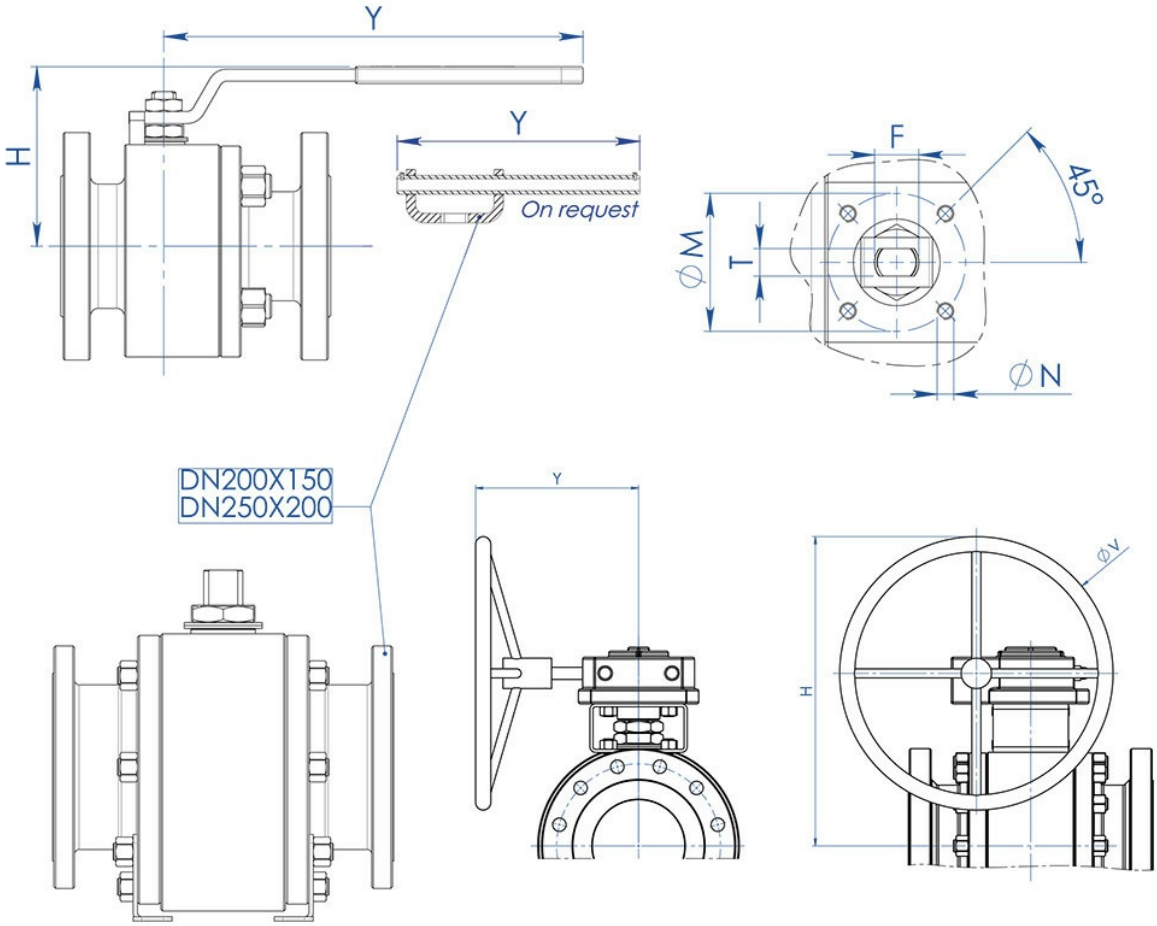

DIMENSIONS									
SIZE		H	Y	øV	øM	øN	F/T	ATT. ISO	LEVER KIT
DN [mm]	[inch]								
DN 20x15	3/4” x 1/2”	71	140	---	36	M5	10/6	F03	KLV58004
DN 25x20	1” x 3/4”	73	140	---	36	M5	10/6	F03	KLV58004
DN 32x25	1” 1/4 x 1”	87	150	---	42	M5	12/8	F04	KLV58006
DN 40x32	1” 1/2 x 1” 1/4	91	150	---	42	M5	12/8	F04	KLV58006
DN 50x40	2” x 1” 1/2	108	275	---	50	M6	16/10	F05	KLV58008
DN 65x50	2” 1/2 x 2”	118	275	---	50	M6	16/10	F05	KLV58008
DN 80x65	3” x 2” 1/2	143	350	---	70	M8	22/14	F07	KLV58010
DN 100x80	4” x 3”	150	350	---	70	M8	22/14	F07	KLV58010
DN 125x100	5” x 4”	198	450	---	102	M10	30/18	F10	KLV58012
DN 150x100	6” x 4”	208	450	---	102	M10	30/18	F10	KLV58012
DN 200x150 ANSI 150 (*)	8” x 6”	522	326	400	140	M16	45/30	F14	---
DN 200x150 ANSI 300	8” x 6”	522	347,5	600	140	M16	45/30	F14	---
DN 250x200 ANSI 150 (*)	10” x 8”	516	347	500	140	M16	52/35	F14	---

STANDARD version with manual gearbox for DN200x150 and DN250x200.
(*) ON REQUEST version with manual lever.

OMAL S.p.A. Società Benefit
Headquarters: Via Ponte Nuovo 11, Rodengo Saiano (Brescia) Italy
Production site: Via Brognolo 12, Passirano (Brescia) Italy
Ph +39 0308900145 Fax +39 0308900423

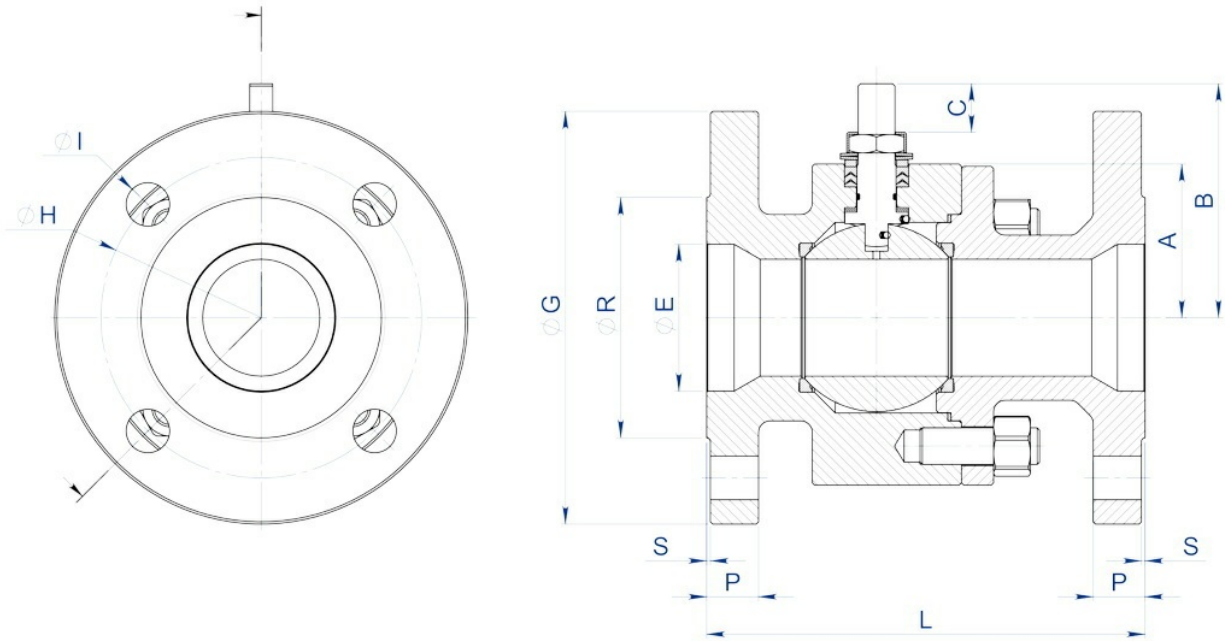

OMAL S.p.A. Società Benefit
Headquarters: Via Ponte Nuovo 11, Rodengo Saiano (Brescia) Italy
Production site: Via Brognolo 12, Passirano (Brescia) Italy
Ph +39 0308900145 Fax +39 0308900423

DIMENSIONS																
SIZE		ANSI	øE	A	B	C	øG	øR	S	P	øH	HOLES N°	øI	Kg	L	SEALS KIT
DN [mm]	[inch]															
DN 20x15	3/4" x 1/2"	150	19	32	52	10	100	42,9	1,6	13	69,8	4	16	2,9	117 (3)	KGBV485040
DN 20x15	3/4" x 1/2"	300	19	32	52	10	118	42,9	1,6	16,6	82,6	4	19	4,1	152 (3)	KGBV485040
DN 25x20	1" x 3/4"	150	25	35	55	10	110	50,8	1,6	14,5	79,2	4	16	3,9	127 (3)	KGBV485050
DN 25x20	1" x 3/4"	300	25	35	55	10	125	50,8	1,6	18	88,9	4	19	5,2	165 (3)	KGBV485050
DN 32x25	1" 1/4 x 1"	150	32	42	68	15	118	63,5	1,6	16,1	88,9	4	16	5,1	140 (3)	KGBV485060
DN 32x25	1" 1/4 x 1"	300	32	42	68	15	135	63,5	1,6	19,5	98,6	4	19	7	178 (3)	KGBV485060
DN 40x32	1" 1/2 x 1" 1/4	150	38	47	73	15	128	73	1,6	18	98,6	4	16	7,7	165 (3)	KGBV485070
DN 40x32	1" 1/2 x 1" 1/4	300	38	47	73	15	155	73	1,6	21	114,3	4	22	10,8	190 (3)	KGBV485070
DN 50x40	2" x 1" 1/2	150	51	58	93	21	153	91,9	1,6	19,6	120,6	4	19	11,8	178 (4)	KGBV485080
DN 50x40	2" x 1" 1/2	300	51	58	93	21	165	91,9	1,6	22,6	127	8	19	14,1	216 (4)	KGBV485080
DN 65x50	2" 1/2 x 2"	150	64	67	102	21	180	104,6	1,6	22,6	139,7	4	19	18,3	191 (4)	KGBV485090
DN 65x50	2" 1/2 x 2"	300	64	67	102	21	190	104,6	1,6	26,1	149,4	8	22	21,5	241 (4)	KGBV485090
DN 80x65	3" x 2" 1/2	150	76	83	130,5	28,4	190	127	1,6	24	152,4	4	19	25,6	203 (4)	KGBV485100
DN 80x65	3" x 2" 1/2	300	76	83	130,5	28,4	210	127	1,6	29	168,1	8	22	33,6	282 (4)	KGBV485100
DN 100x80	4" x 3"	150	102	90	137,5	28,4	230	157,2	1,6	24,6	190,5	8	19	35,9	229 (4)	KGBV485110
DN 100x80	4" x 3"	300	102	96	137,5	28,4	255	157,2	1,6	32,6	200,2	8	22	50,5	305 (4)	KGBV485110
DN 125x100	5" x 4"	150	118	111	172	35	255	185,7	1,6	24,6	215,9	8	22	53	254 (3)	KGBV485120
DN 125x100	5" x 4"	300	118	111	172	35	280	185,7	1,6	36,6	215,9	8	22	78,9	381 (3)	KGBV485120
DN 150x100	6" x 4"	150	152	111	172	35	280	215,9	1,6	25,6	241,3	8	22	67,7	394 (4)	KGBV485120
DN 150x100	6" x 4"	300	152	111	172	35	320	215,9	1,6	37,6	269,7	12	22	91,4	403 (4)	KGBV485120
DN 200x150(*)	8" x 6"	150	203	154	227,5	40,5	345	269,7	1,6	29	298,4	8	22	151,5	457 (4)	KGBV485140
DN 200X150	8" x 6"	300	203	154	227,5	40,5	381	269,7	1,6	42,5	330,2	12	25,4	184	502	KGBV48514D
DN 250x200(*)	10" x 8"	150	254	188	274	44,8	407	323,8	1,6	31	362	12	25,4	246	533 (4)	KGBV485150

STANDARD version with manual gearbox for DN200x150 and DN250x200.
(*) ON REQUEST version with manual lever.
(3) ANSI B16.10
(4) B16.10 / API6D

OMAL S.p.A. Società Benefit
Headquarters: Via Ponte Nuovo 11, Rodengo Saiano (Brescia) Italy
Production site: Via Brognolo 12, Passirano (Brescia) Italy
Ph +39 0308900145 Fax +39 0308900423

materials

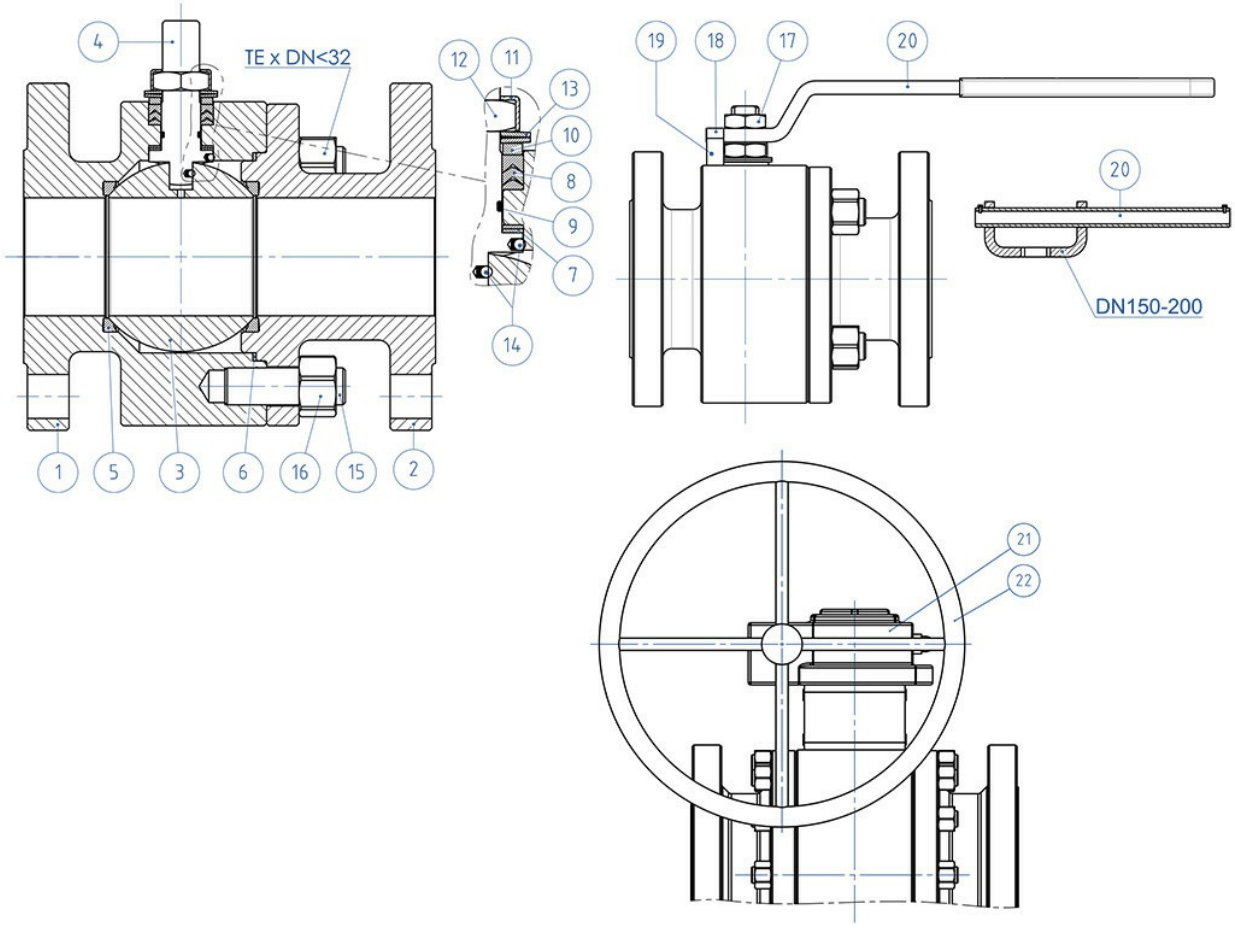

OMAL S.p.A. Società Benefit
Headquarters: Via Ponte Nuovo 11, Rodengo Saiano (Brescia) Italy
Production site: Via Brognolo 12, Passirano (Brescia) Italy
Ph +39 0308900145 Fax +39 0308900423

MATERIALS SPLIT BODY ANSI 150-300 carbon steel			
N°	**escription**	**A105 Carbon steel**	**A350 LF2 Carbon steel**
1	Body	ASTM A105	ASTM A350 LF2
2	Connector		
3	Ball	ASTM A351 CF8 (*) (1.4308/Gx5CrNi19-10)	
4	Stem	ASTM A182F6A / A479 Tp.410 (**)	
5*	Seat	Modified PTFE (2)	
6*	Body-connector gasket	GRAFOIL	
7*	Stem lower sealing	Modified PTFE (.)	
8*	Chevron rings	Modified PTFE (.)	
9*	Stem o-ring	FKM (.)	
10	Packing gland ring	Carbon steel galvanized (x) (1)	
11	Stop nut plate	304 S.S.	
12	Stem nut	Carbon steel galvanized (x)	
13	Springs washer	Carbon steel galvanized (xx)	
14	Antistatic device	316 S.S.	
15	Stud bolt	ASTM A193-B7	A320-L7M
16	Nut	ASTM A194-Gr.2H	A194-Gr.7M
17	Lock nut	Carbon steel galvanized (x)	
18	Holder screw	A2-70 (304 S.S.)	
19	Holder screw	Carbon steel galvanized (x)	
20	Lever	Carbon steel galvanized (x)	
21	Gear box	Cast iron (painted)	
22	Handwheel	Carbon steel painted	
* Components of seals kit			

Available on request:
(*): A351 CF8M
(**): A564 TP.630 (17-4PH)
(x): 304 s.s.
(xx): 301 s.s.
(1): for DN200x150 & DN250x200 available only in 304 S.S.
(2) DEVLON for DN200x150 ANSI300
(.): Other materials available on request

OMAL S.p.A. Società Benefit
Headquarters: Via Ponte Nuovo 11, Rodengo Saiano (Brescia) Italy
Production site: Via Brognolo 12, Passirano (Brescia) Italy
Ph +39 0308900145 Fax +39 0308900423

CASTING STEM EXTENSION WITH LEVER

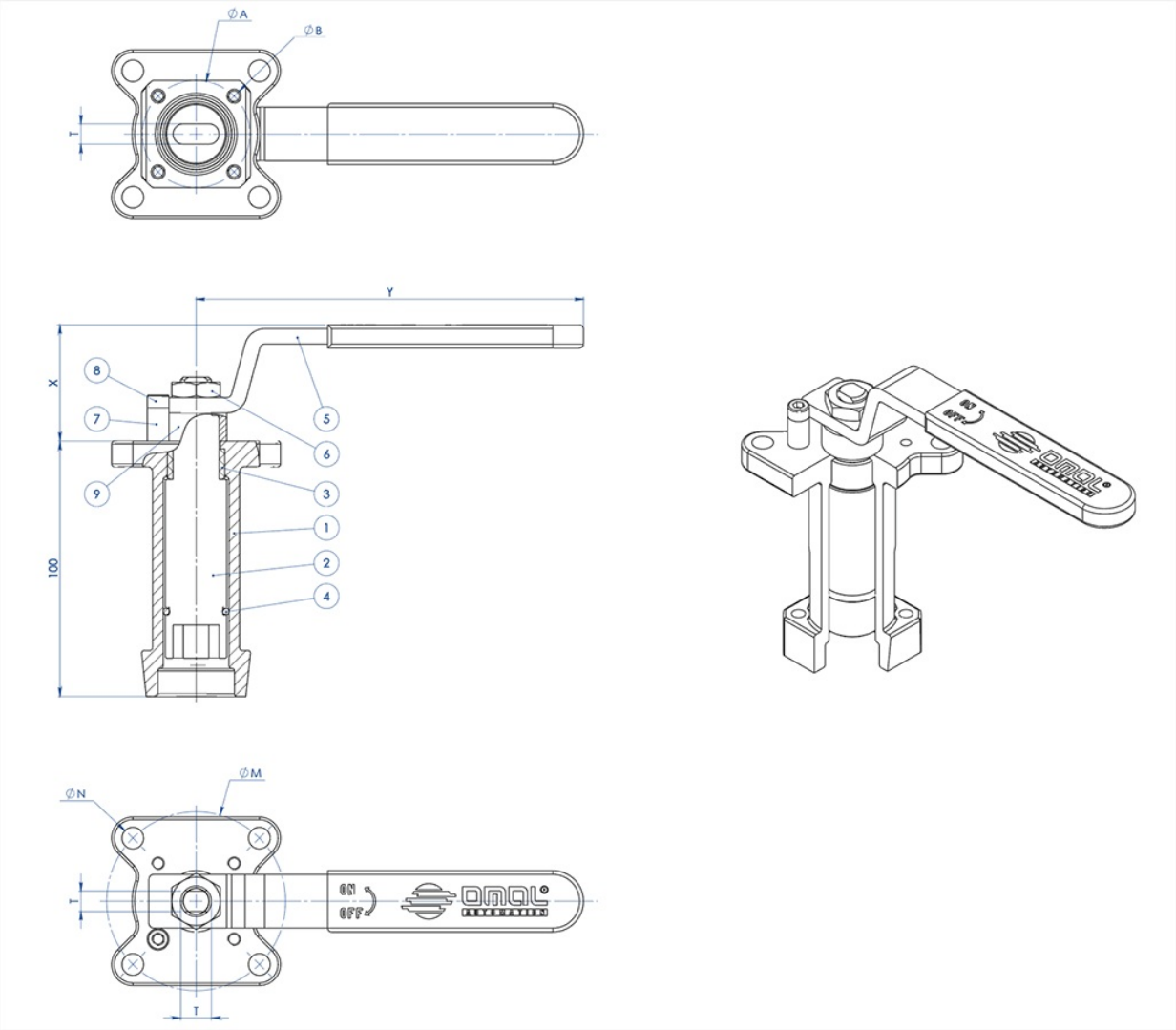

MATERIALS		
PART. N°	**DESCRIPTION**	**MATERIAL**
1	Extension	AISI304 S.S.
2	Pin	AISI 430 F
3	Bush	DELRIN
4	O-RING	NBR
5	Lever	Fe 37 galvanized (*)
6	Nut	galvanized carbon steel (*)
7	Holder Lever	galvanized carbon steel (*)
8	Holder screw	A2-70
9	Spacer	PTFE Carbon Filled

(*): On request available in Aisi 304 s.s.

OMAL S.p.A. Società Benefit
Headquarters: Via Ponte Nuovo 11, Rodengo Saiano (Brescia) Italy
Production site: Via Brognolo 12, Passirano (Brescia) Italy
Ph +39 0308900145 Fax +39 0308900423

DIMENSIONS							
ISO VALVE	ØA	ØB	ØM	ØN	F/T	X	Y
F03	36	5,5	36	5,5	10/6	38,5	141,5
F04	42	5,5	42	M5	12/8	45,5	151,5
F05	50	6,5	50	6,5	16/10	48,5	276,5
F07	70	8,5	70	8,5	22/14	57,5	351,5
F10	102	11	102	11	30/18	79,5	451,5

NOTE: Code of the spindle extension depending from drive's type and valve's connection; to be requested at the order.

CASTING STEM EXTENSION FOR ACTUATORS

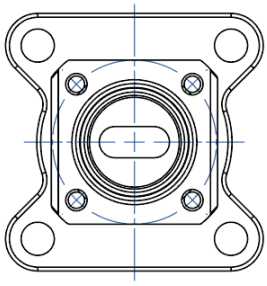

NOTA: Le dimensioni dipendono dalle dimensioni dell'attacco valvola
NOTE: Dimensions depending from valve's connection

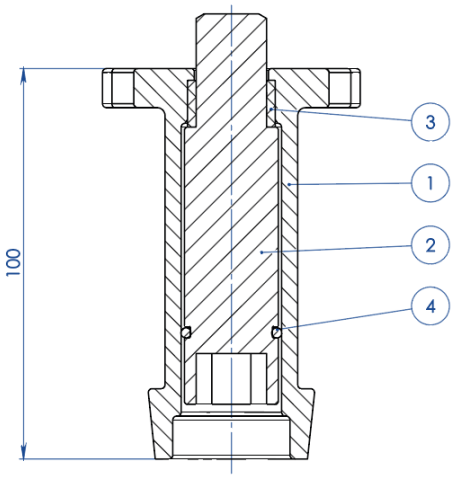

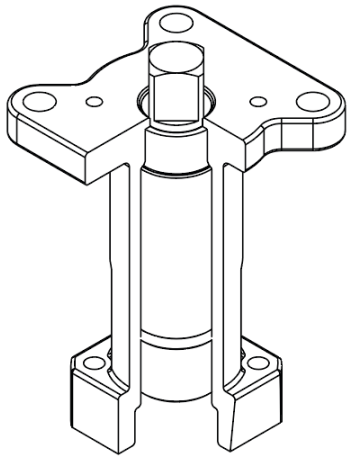

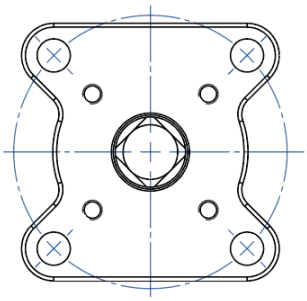

NOTA: Le dimensioni dipendono dalla taglia dell'attuatore
NOTE: Dimensions depending from actuator's size

OMAL S.p.A. Società Benefit
Headquarters: Via Ponte Nuovo 11, Rodengo Saiano (Brescia) Italy
Production site: Via Brognolo 12, Passirano (Brescia) Italy
Ph +39 0308900145 Fax +39 0308900423

MATERIALS		
PART. N°	**DESCRIPTION**	**MATERIAL**
1	Extension	ASTM A351 CF8M
2	Pin	AISI 430 F
3	Bush	DELRIN
4	O-RING	NBR

NOTE: Code of the spindle extension depending from drive's type and valve's connection; to be requested at the order

WELDED STEM EXTENSION WITH LEVER

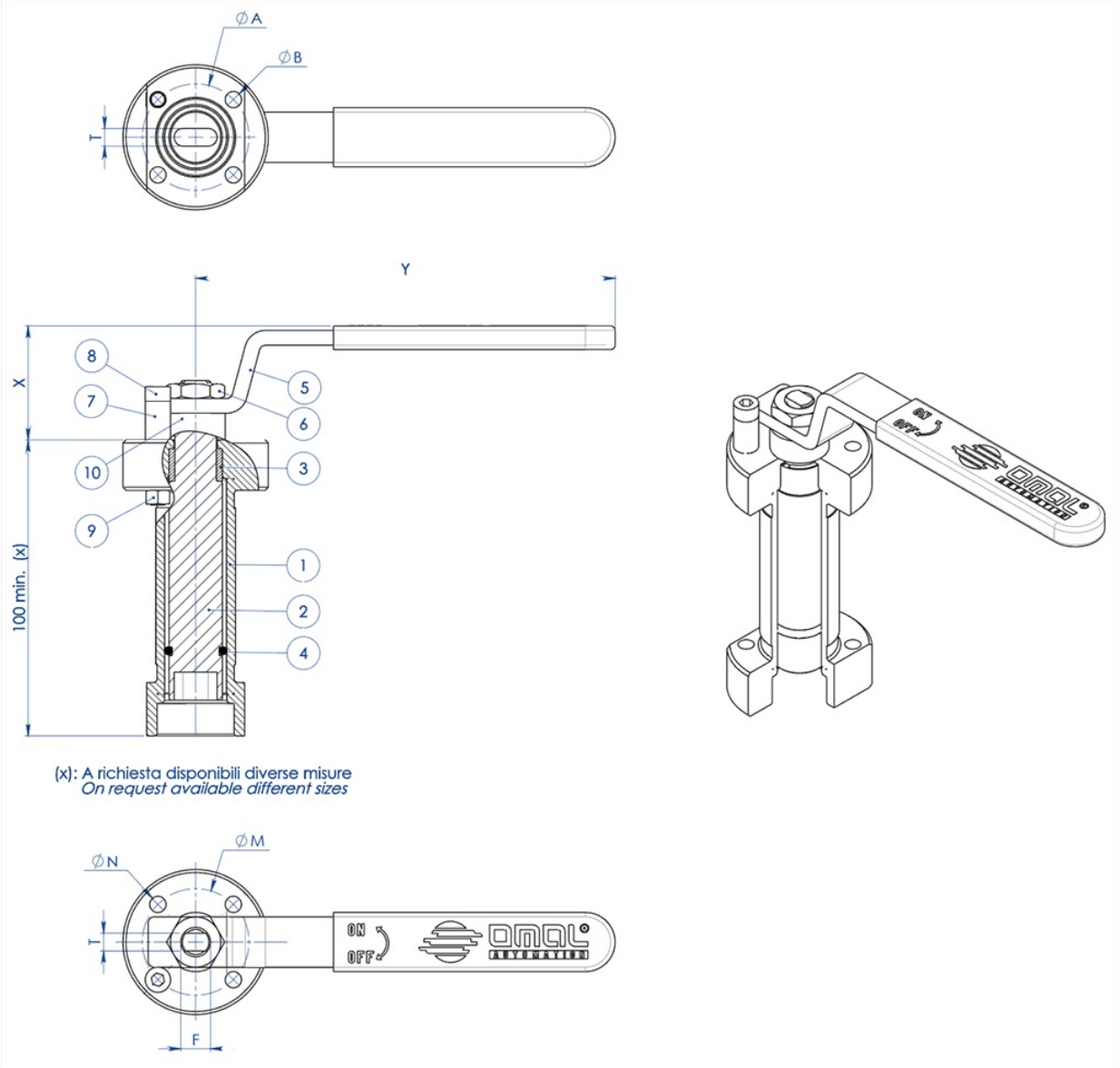

OMAL S.p.A. Società Benefit
Headquarters: Via Ponte Nuovo 11, Rodengo Saiano (Brescia) Italy
Production site: Via Brognolo 12, Passirano (Brescia) Italy
Ph +39 0308900145 Fax +39 0308900423

MATERIALS		
PART. N°	**DESCRIPTION**	**MATERIAL**
1	Extension	304 s.s.
2	Pin	AISI 430 F
3	Bush	DELRIN
4	O-Ring	NBR
5	Lever	Fe 37 galvanized (*)
6	Nut	galvanized carbon steel (*)
7	Holder Lever	galvanized carbon steel (*)
8	Holder screw	A2-70
9	Holder nut	A2-70 (**)
10	Spacer	PTFE Carbon Filled

(*): On request available in Aisi 304 s.s.
(**): No available on valves with Iso connection F04

DIMENSIONS							
ISO VALVE	**ØA**	**ØB**	**ØM**	**ØN**	**F/T**	**X**	**Y**
F03	36	5,5	36	5,5	10/6	38,5	141,5
F04	42	5,5	42	M5	12/8	45,5	151,5
F05	50	6,5	50	6,5	16/10	48,5	276,5
F07	70	9	70	9	22/14	57,5	351,5
F10	102	11	102	11	30/18	79,5	451,5

NOTE: Code of the stem extension depending from drive's type and valve's connection; to be requested at the order.

WELDED STEM EXTENSION FOR ACTUATORS

OMAL S.p.A. Società Benefit
Headquarters: Via Ponte Nuovo 11, Rodengo Saiano (Brescia) Italy
Production site: Via Brognolo 12, Passirano (Brescia) Italy
Ph +39 0308900145 Fax +39 0308900423

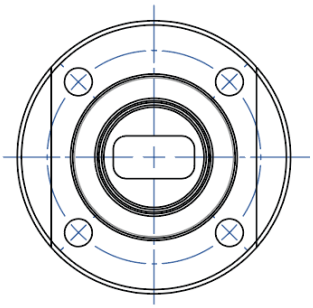

NOTA: Le dimensioni dipendono dalle dimensioni dell'attacco valvola
NOTE: Dimensions depending from valve's connection

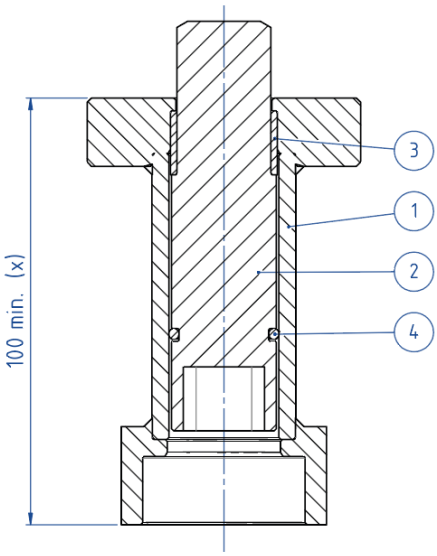

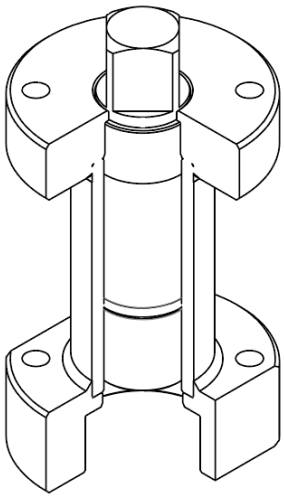

(x): A richiesta disponibili diverse misure
On request available different sizes

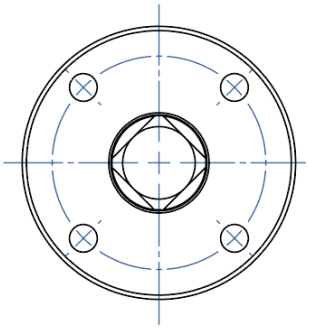

NOTA: Le dimensioni dipendono dalla taglia dell'attuatore
NOTE: Dimensions depending from actuator's size

MATERIALS		
PART. N°	**DESCRIPTION**	**MATERIAL**
1	Extension	304 S.S.
2	Pin	AISI 430 F
3	Bush	DELRIN
4	O-RING	NBR

NOTE: Code of the stem extension depending from drive's type and valve's connection; to be requested at the order.

OMAL S.p.A. Società Benefit
Headquarters: Via Ponte Nuovo 11, Rodengo Saiano (Brescia) Italy
Production site: Via Brognolo 12, Passirano (Brescia) Italy
Ph +39 0308900145 Fax +39 0308900423

STEM EXTENSION WITH ADDITIONAL SEAL

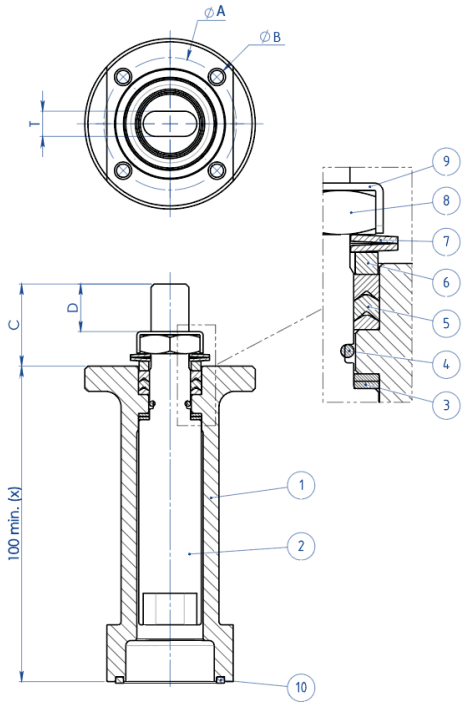

(x): A richiesta disponibili diverse misure
On request available different sizes

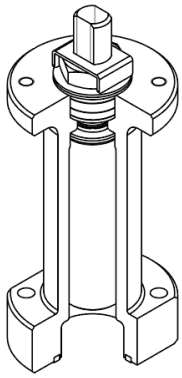

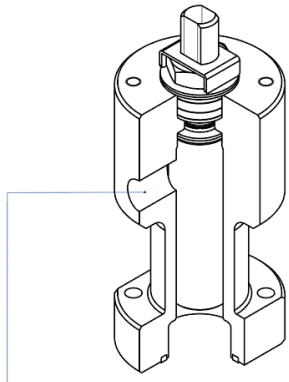

A richiesta disponibile anche la versione con presa per Sniffer
Stem extension with sniffer also available on request

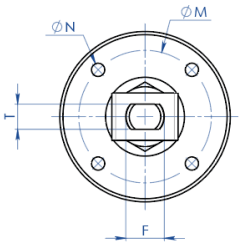

MATERIALS		
PART. N°	**DESCRIPTION**	**MATERIAL**
1	Extension	304 s.s.
2	Pin	A564 TP.630 (17-4ph)
3	Bottom Sealing	TFM1600
4	O-Ring	FKM
5	Chevron Ring	TFM1600
6	Packing Gland Ring	304 s.s.
7	Spring Washer	50CrV4 Galvanized
8	Stem Nut	UNI 3740-1 6S Galvanized
9	Stop Nut Plate	304 s.s.
10	Gasket	GRAFOIL

OMAL S.p.A. Società Benefit
Headquarters: Via Ponte Nuovo 11, Rodengo Saiano (Brescia) Italy
Production site: Via Brognolo 12, Passirano (Brescia) Italy
Ph +39 0308900145 Fax +39 0308900423

DIMENSIONS							
ISO VALVE	**ØA**	**ØB**	**ØM**	**ØN**	**F/T**	**C**	**D**
F03	36	5,5	36	M5	10/6	20	10,2
F04	42	5,5	42	M5	12/8	26	15,1
F05	50	6,5	50	M6	16/10	35	21,2
F07	70	8,5	70	M8	22/14	47,5	28,4
F10	102	10,5	102	M10	30/18	61	35,2

NOTE: Code of the spindle extension depending from drive's type and valve's connection; to be requested at the order.

documents

Certificati

TA LUFT - MAGNUM & THOR
ATEX - Ball Valves
SIL IEC 61508 - MAGNUM & THOR
FUGITIVE EMISSION DN25 CL.300 T1-T2-T3-M1-M4-M5-M6
FUGITIVE EMISSION DN100 CL.300 T1-T2-T3-M1-M4-M5-M6
PED
FIRE SAFE - SPLIT BODY DN100-200 A105
FIRE SAFE - SPLIT BODY DN15-100 A105
API Licence number 6D-1007

Istruzioni

ISTRUZIONI ATEX 8_0486
ISTRUZIONI USO 8_0844-35

Manuali

MANUALE UMAH1000