OMAL S.p.A. Società Benefit
Headquarters: Via Ponte Nuovo 11, Rodengo Saiano (Brescia) Italy
Production site: Via Brognolo 12, Passirano (Brescia) Italy
Ph +39 0308900145 Fax +39 0308900423

Warning: filectime(): stat failed for /var/www/vhost/www.omal.it/htdocs/https://www.omal.it/./FilesProdotti/Certificate-202025602-OMAL-AttuatoriRackon.pdf in **/var/www/vhost/www.omal.it/htdocs/prodotto-printable.php** on line **65**

Warning: filectime(): stat failed for /var/www/vhost/www.omal.it/htdocs/https://www.omal.it/./FilesProdotti/Rel20-4789382478-1-1-0-SIC-A-RACKON.png in **/var/www/vhost/www.omal.it/htdocs/prodotto-printable.php** on line **65**

Warning: filectime(): stat failed for /var/www/vhost/www.omal.it/htdocs/https://www.omal.it/./FilesProdotti/CD2020-0112OMALRACKON.pdf in **/var/www/vhost/www.omal.it/htdocs/prodotto-printable.php** on line **65**

Warning: filectime(): stat failed for /var/www/vhost/www.omal.it/htdocs/https://www.omal.it/./FilesProdotti/UMAAPRK0-RACKON-IT.pdf in **/var/www/vhost/www.omal.it/htdocs/prodotto-printable.php** on line **65**

Warning: filectime(): stat failed for /var/www/vhost/www.omal.it/htdocs/https://www.omal.it/./FilesProdotti/OMALAttuatoriRK-19.pdf in **/var/www/vhost/www.omal.it/htdocs/prodotto-printable.php** on line **65**

Warning: filectime(): stat failed for /var/www/vhost/www.omal.it/htdocs/https://www.omal.it/./FilesProdotti/APRK1219-FogliettoIstruzioniRACKON.pdf in **/var/www/vhost/www.omal.it/htdocs/prodotto-printable.php** on line **65**

RACKON - Double acting DA

Macro Pneumatic actuators

Category RACKON - Rack & Pinion pneumatic actuators

benefits

RACK & PINION KINEMATICS

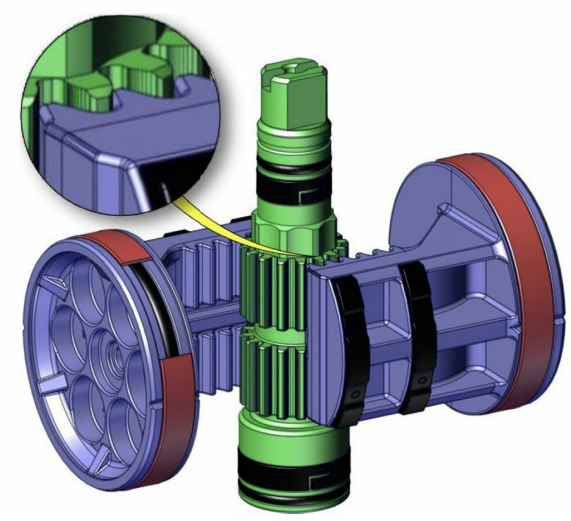

DOUBLE ADJUSTMENT

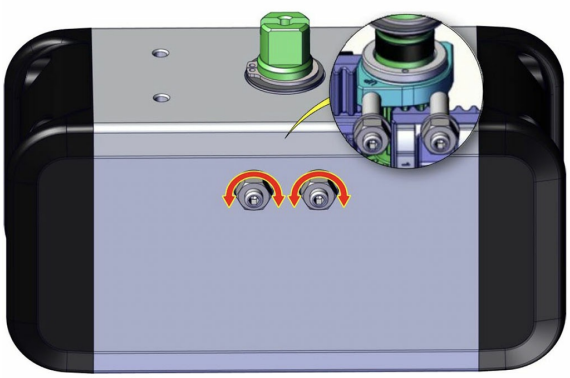

DA DOUBLE ACTING

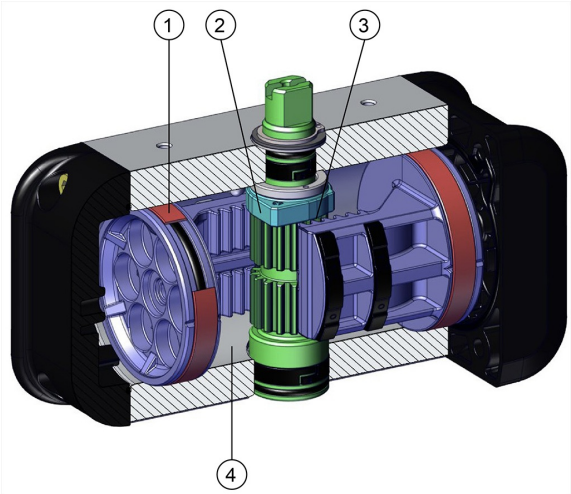

OMAL S.p.A. Società Benefit
Headquarters: Via Ponte Nuovo 11, Rodengo Saiano (Brescia) Italy
Production site: Via Brognolo 12, Passirano (Brescia) Italy
Ph +39 0308900145 Fax +39 0308900423

SR SPRING RETURN

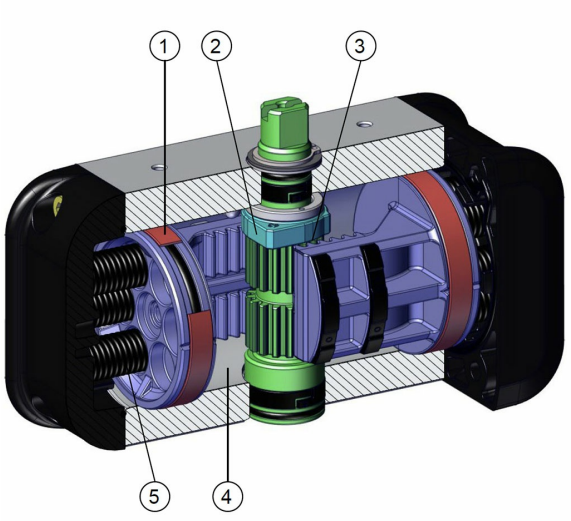

1. Energized and self-lubricated strips.
Less friction between piston and cylinder.
It prevents the bonding of the seal to the cylinder even after long periods of inactivity.

2. Adjustment cam made by steel.
Possibility to adjust the closing and/or opening with a standard actuator (± 5° for each adjustment).
Simplicity and reliability of adjustment.

3. Transformation of linear motion into rotary motion using Rack and Pinion kinematics.
Linear torque (BTO & BTC), suitable for ball valves.
High adjustment precision thanks to the rigidity of the rack and pinion system and the mechanical stop between cam and adjustment grub screw.
Uniform rotation speed.

4. Rolled cylinder.
Less wear of the energized ties thanks to the low roughness of the surface (0.15 µm Ra).

5. Cartridge spring modular system.
High configuration flexibility and precision of the torque generated by the springs.
High range of configurations.

NAMUR interface for solenoid valves can be available on complete range.
With plate reported from RK10 to RK240. - Integrated for RK 300 and RK480.

NPT air hole threads available on request.
With plate reported for all sizes.

100% in- house manufacturing process technology.
Maximum control and accuracy in all the stages of the manufacturing process.

ATEX compliance.
Installation is allowed in a potential explosive environment.

Up to SIL 3 Certified.
Guarantee of the high level of functional safety.

features

TECHNICAL FEATURES

- Torque from 10 Nm to 474 Nm.
- Mounting flange according to EN ISO 5211: F03 - F04 - F05 - F07 - F10 - F12.
- In accordance with EN 15714-3.
- In conformity with directive ATEX 2014/34/EU.
- Rotation angle: 100° (-5°, +95°).
- Double adjusting +5° and -5° for each end position (0° and 90°).
- Torque: directly proportional to the air supply (see table).
- The code numbers after the RK letters, always correspond to the torque in Nm by 5,6 bar air supply.

WORKING CONDITIONS

- Standard temperature range: -20°C +80°C.
  Special versions:
  - high temperature: -20°C +150°C.
  - low temperature: -50°C +60°C.
- Nominal pressure: 5.5 bar; maximum operating pressure 8 bar.
- Operating medium: filtered compressed air, no lubrication needed according to UNI EN 15714-3:2009.
- In case of lubrication, use non-detergent oil, compatible with the internal seals.

SPECIAL VERSION ON REQUEST, CODING KEY

CHARACTERISTIC		
Actuator Type	RK	
Size	0010, 0020, 0040, 0060, 0080, 00120, 00160, 0240, 0300, 0480	
Customer	VO	OMAL
Rotation Angle [°]	A	90°
	B*	180°
	C*	120°
	D*	135°
Rotation direction	R	Clockwise rotation
	L	Counter-clockwise rotation
Functioning configuration	S	Spring Return N.C.
	O	Spring Return N.O.
	D	Double Acting
Springs	00	No springs
	20	Springs 2,0 bar
	25	Springs 2,5 bar
	30	Springs 3,0 bar
	35	Springs 3,5 bar
	40	Springs 4,0 bar
	45	Springs 4,5 bar
	50	Springs 5,0 bar

	55	Springs 5,5 bar
	60	Springs 6,0 bar
Flange or smaller flange in case of double flange available	03	F03
	04	F04
	05	F05
	07	F07
	10	F10
	12	F12
Shaft shape	Q	Star shaft
	D*	Flat head shaft
Shaft dimension	09	Shaft dimension 9 mm
	11	Shaft dimension 11 mm
	14	Shaft dimension 14 mm
	17	Shaft dimension 17 mm
	22	Shaft dimension 22 mm
	27	Shaft dimension 27 mm
Air connection	G	Namur plate GAS
	N	Namur plate NPT
	0	Gas Thread on the cilynder (no Namur interface)
	I	Namur interface, integrated Gas threads
Version	-	Standard
	6*	Low temperature
	4*	High temperature

* Only on request.
N.B. For special versions contact OMAL.

CODING EXAMPLE FOR RACKON

Product Code: **RK0040VOARD0005Q11G**
Product description: RACKON 40 PNEUMATIC ACTUATOR DOUBLE ACTING ISO F05 07 STAR SHAFT 11mm WITH GAS NAMUR PLATE.

Product Code: **RK0300VOARD0007Q22I**
Product description: RACKON 300 PNEUMATIC ACTUATOR DOUBLE ACTING ISO F07 10 STAR SHAFT 22mm NAMUR GAS INTERFACE INTEGRATED ON BODY.

Product Code: **RK0040VOARS6005Q11G**
Product description: RACKON 40 PNEUMATIC ACTUATOR SPRING RETURN 6BAR ISO F05 07 STAR SHAFT 11mm WITH GAS NAMUR PLATE.

Product Code: **RK0300VOARS6007Q22I**
Product description: RACKON 300 PNEUMATIC ACTUATOR SPRING RETURN 6BAR ISO F07 10 STAR SHAFT 22mm NAMUR GAS INTERFACE INTEGRATED ON BODY.

OMAL S.p.A. Società Benefit
Headquarters: Via Ponte Nuovo 11, Rodengo Saiano (Brescia) Italy
Production site: Via Brognolo 12, Passirano (Brescia) Italy
Ph +39 0308900145 Fax +39 0308900423

dimensions

RK10 ÷ RK240

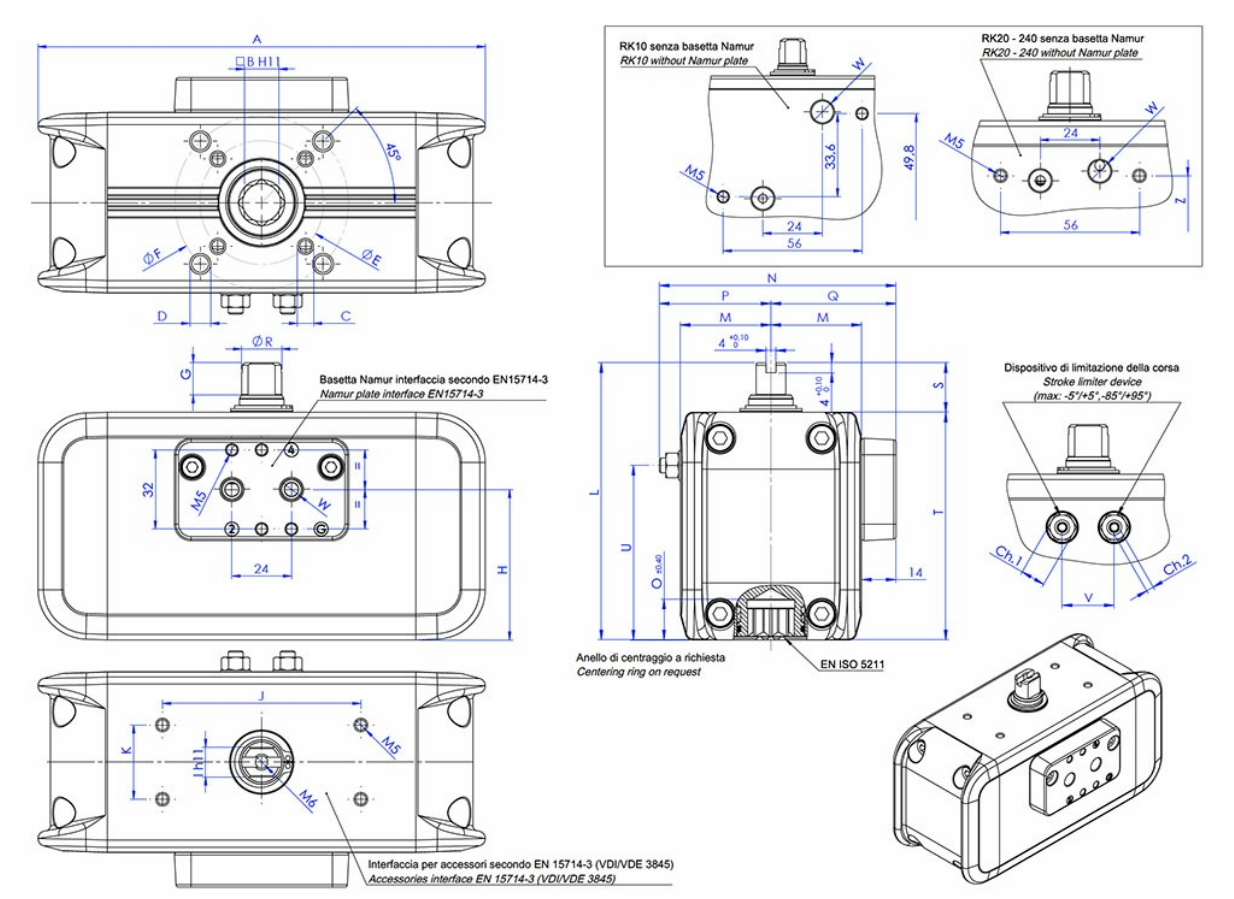

OMAL S.p.A. Società Benefit
Headquarters: Via Ponte Nuovo 11, Rodengo Saiano (Brescia) Italy
Production site: Via Brognolo 12, Passirano (Brescia) Italy
Ph +39 0308900145 Fax +39 0308900423

	DIMENSIONS [mm]											
Size	**RK10**	**RK10**	**RK20**	**RK20**	**RK20**	**RK20**	**RK40**	**RK40**	**RK40**	**RK40**	**RK60**	**RK80**
ISO	F03	F04	F03/F05	F03/F05	F04	F04	F04	F04	F05/F07	F05/F07	F05/F07	F05/F07
A	121,7	121,7	153,7	153,7	153,7	153,7	180,4	180,4	180,4	180,4	215,4	235,5
B	9	9	9	11	9	11	11	14	11	14	14	17
C x depth	M5x8	M5x8	M5x8	M5x8	M5x8	M5x8	M5x8	M5x8	M6x9	M6x9	M6x9	M6x9
D x depth	-	-	M6x9	M6x9	-	-	-	-	M8x12	M8x12	M8x12	M8x12
E	36	42	36	36	42	42	42	42	50	50	50	50
F	-	-	50	50	-	-	-	-	70	70	70	70
G	10	10	10	10	10	10	13	13	13	13	13	13
H	33	33	50,9	50,9	50,9	50,9	60,8	60,8	60,8	60,8	68,7	75,6
I	9	9	9	9	9	9	12	12	12	12	12	15
J	50	50	80	80	80	80	80	80	80	80	80	80
K	25	25	30	30	30	30	30	30	30	30	30	30
L	80	80	100	100	100	100	112	112	112	112	122	130
M	24,5	24,5	30	30	30	30	36,5	36,5	36,5	36,5	41,5	46
N	71*	71*	82,5*	82,5*	82,5*	82,5*	95,5*	95,5*	95,5*	95,5*	107,8*	116,5*
O	10,7	10,7	13,2	13,2	13,2	13,2	16,5	16,5	16,5	16,5	16,5	19,3
P	32,5*	32,5*	38,5*	38,5*	38,5*	38,5*	45*	45*	45*	45*	52,3*	56,5*
Q	38,5	38,5	44	44	44	44	50,5	50,5	50,5	50,5	55,5	60
R	10,9	10,9	12,7	12,7	12,7	12,7	16,2	16,2	16,2	16,2	18	20,2
S	15	15	20	20	20	20	20	20	20	20	20	20
T	65	65	80	80	80	80	92	92	92	92	102	110
U	49	49	59,75	59,75	59,75	59,75	70,5	70,5	70,5	70,5	70,5	86
V	16	16	19	19	19	19	21	21	21	21	24	26
W standard (GAS)	1/8"	1/8"	1/8"	1/8"	1/8"	1/8"	1/8"	1/8"	1/8"	1/8"	1/8"	1/8"
W special (NPT)	1/8"-27	1/8"-27	1/8"-27	1/8"-27	1/8"-27	1/8"-27	1/8"-27	1/8"-27	1/8"-27	1/8"-27	1/8"-27	1/8"-27
Ch.1	10	10	10	10	10	10	10	10	10	10	13	13
Ch.2	3	3	3	3	3	3	3	3	3	3	4	4
Weight (kg)	0,9	0,9	1,4	1,4	1,4	1,4	2,1	2,1	2,1	2,1	2,9	3,7
Air (dm3/cycle)	0,12	0,12	0,25	0,25	0,25	0,25	0,48	0,48	0,48	0,48	0,75	1,04
Z	49,8	49,8	59,9	59,9	59,9	59,9	69,8	69,8	69,8	69,8	77,7	84,6
W	1/8"	1/8"	1/8"	1/8"	1/8"	1/8"	1/8"	1/8"	1/8"	1/8"	1/8"	1/8"

H = CENTER OF PLATE'S FIXING.
* Variable according to adjustment.

RK300 ÷ RK480

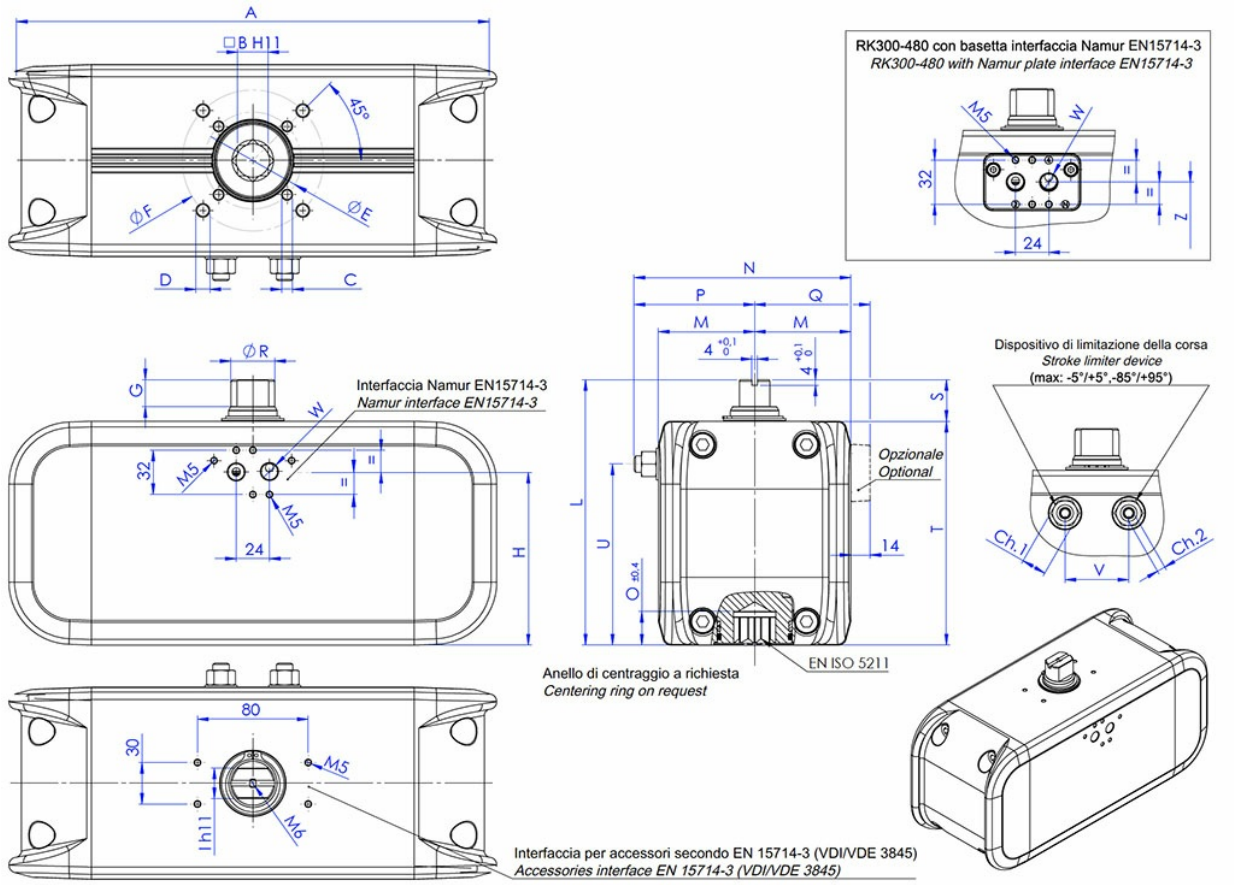
A
□B H11
45°
ØF
ØE
D
C
RK300-480 con basetta interfaccia Namur EN15714-3
RK300-480 with Namur plate interface EN15714-3
M5
W
32
24
Z
N
P
Q
M
M
4 +0,1 0
4 +0,1 0
ØR
G
Interfaccia Namur EN15714-3
Namur interface EN15714-3
W
32
M5
M5
24
H
L
U
O ±0,4
S
T
14
Opzionale
Optional
EN ISO 5211
Anello di centraggio a richiesta
Centering ring on request
Dispositivo di limitazione della corsa
Stroke limiter device
(max: -5°/+5°,-85°/+95°)
Ch.1
Ch.2
V
80
30
M5
M6
I h11
Interfaccia per accessori secondo EN 15714-3 (VDI/VDE 3845)
Accessories interface EN 15714-3 (VDI/VDE 3845)

OMAL S.p.A. Società Benefit
Headquarters: Via Ponte Nuovo 11, Rodengo Saiano (Brescia) Italy
Production site: Via Brognolo 12, Passirano (Brescia) Italy
Ph +39 0308900145 Fax +39 0308900423

DIMENSIONS [mm]		
Size	**RK300**	**RK480**
ISO	F07/F10	F10/F12
A	352,4	393,4
B	22	27
C x depth	M8x12	M10x15
D x depth	M10x15	M12x18
E	70	102
F	102	125
G	19,5	19,5
H	125	145
I	22	27
L	192	214
M	69,5	80
N	156,5*	180*
O	24,3	29,5
P	87*	100*
Q	83,5	94
R	31,8	38
S	30	30
T	162	184
U	131	149,5
V	46	52
W standard (GAS)	1/4"	1/4"
W special (NPT)	1/4"-18	1/4"-18
Ch.1	18	21
Ch.2	6	6
Weight (kg)	11,4	16,3
Air (dm3/cycle)	3,77	5,8
Z	124,5	144,5
W	1/4"	1/4"

H = CENTER OF PLATE'S FIXING.
* Variable according to adjustment.

OMAL S.p.A. Società Benefit
Headquarters: Via Ponte Nuovo 11, Rodengo Saiano (Brescia) Italy
Production site: Via Brognolo 12, Passirano (Brescia) Italy
Ph +39 0308900145 Fax +39 0308900423

materials

RK10 ÷ RK480

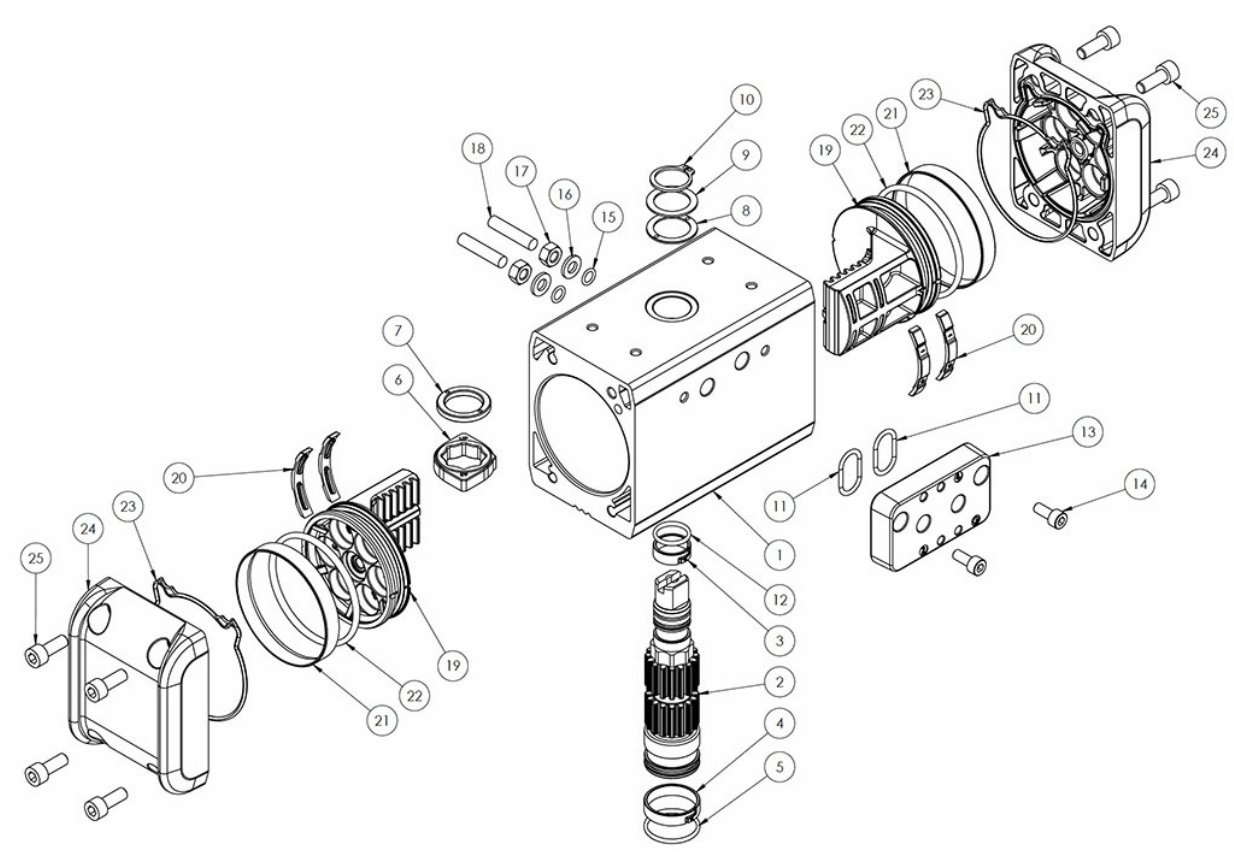

OMAL S.p.A. Società Benefit
Headquarters: Via Ponte Nuovo 11, Rodengo Saiano (Brescia) Italy
Production site: Via Brognolo 12, Passirano (Brescia) Italy
Ph +39 0308900145 Fax +39 0308900423

MATERIALS			
Pos.	**Description**	**Q.ty**	**Material**
1	Cylinder	1	Aluminium alloy
2	Shaft	1	Steel alloy
3*	Slide ring (upper shaft support)	1	Acetalic resins
4*	Slide ring (lower shaft support)	1	Acetalic resins
5*	O-Ring (lower shaft sealing)	1	Nitrilic rubber
6	Cam	1	Steel alloy
7*	Internal support ring	1	Acetalic resins
8*	External support ring	1	Acetalic resins
9	Washer	1	Stainless steel
10*	Seeger	1	Stainless steel
11*	O-ring**	2	Nitrilic rubber
12*	O-ring (upper sealing shaft)	1	Nitrilic rubber
13	Namur plate**	1	Aluminium alloy
14	Screws**	2	Stainless steel
15*	O-ring	2	Nitrilic rubber
16*	Washer (limit stroke)	2	Stainless steel
17*	Hexagon nut (limit stroke)	2	Stainless steel
18*	Grub screw (limit stroke)	2	Stainless steel
19	Piston	2	Aluminium alloy
20*	Piston support leg	4	Acetalic resins
21*	Dynamic seal	2	Polyurethan
22*	O-ring	2	Nitrilic rubber
23*	End-cap O-ring	2	Nitrilic rubber
24	Cap	2	Aluminium alloy
25	Screws	8	Stainless steel

* Components of spare part kit.
** Not present for some models, see code table.

OMAL S.p.A. Società Benefit
Headquarters: Via Ponte Nuovo 11, Rodengo Saiano (Brescia) Italy
Production site: Via Brognolo 12, Passirano (Brescia) Italy
Ph +39 0308900145 Fax +39 0308900423

diagrams and breakaway torque

"DA" OUTPUT TORQUE DIAGRAM (Nm)

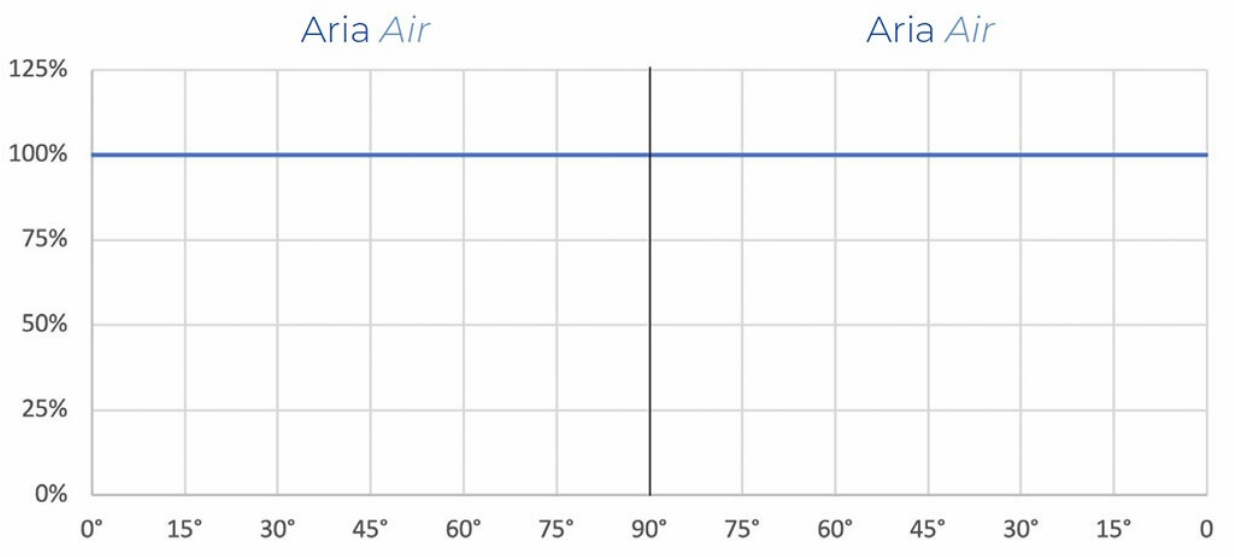

RACKON "DA" OUTPUT TORQUE TABLE (Nm)												
Size	**Air bar**											
	2 bar	2,5 bar	3 bar	3,5 bar	4 bar	4,5 bar	5 bar	5,5 bar	5,6 bar	6 bar	7 bar	8 bar
RK10	3,7	4,7	5,6	6,6	7,5	8,4	9,4	**10,3**	10,5	11,2	13,1	15,0
RK20	7,3	9,1	11,0	12,8	14,6	16,4	18,3	**20,1**	20,5	21,9	25,6	29,2
RK40	13,9	17,4	20,9	24,4	27,9	31,3	34,8	**38,3**	39,0	41,8	48,7	55,7
RK60	21,2	26,5	31,9	37,2	42,5	47,8	53,1	**58,4**	59,5	63,7	74,3	84,9
RK80	30,0	37,5	44,9	52,4	59,9	67,4	74,9	**82,4**	83,9	89,9	104,9	119,9
RK120	42,7	53,4	64,0	74,7	85,4	96,1	106,7	**117,4**	119,5	128,1	149,4	170,8
RK160	58,5	73,2	87,8	102,5	117,1	131,7	146,4	**161,0**	163,9	175,6	204,9	234,2
RK240	85,2	106,5	127,8	149,1	170,4	191,7	213,0	**234,3**	238,6	255,6	298,2	340,8
RK300	109,8	137,2	164,7	192,1	219,6	247,0	274,5	**301,9**	307,4	329,3	384,2	439,1
RK480	172,4	215,5	258,5	301,6	344,7	387,8	430,9	**474,0**	482,6	517,1	603,3	689,5

For output torque at different pressures contact OMAL.

OMAL S.p.A. Società Benefit
Headquarters: Via Ponte Nuovo 11, Rodengo Saiano (Brescia) Italy
Production site: Via Brognolo 12, Passirano (Brescia) Italy
Ph +39 0308900145 Fax +39 0308900423

DOUBLE ACTING ACTUATOR WORKING PLANE

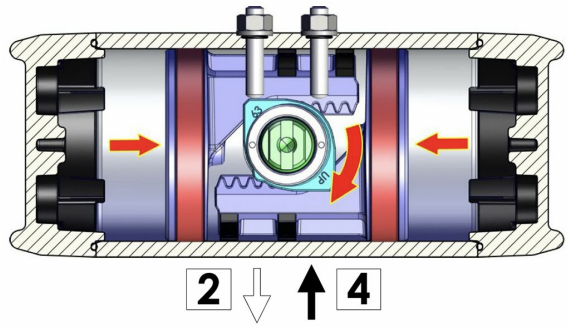

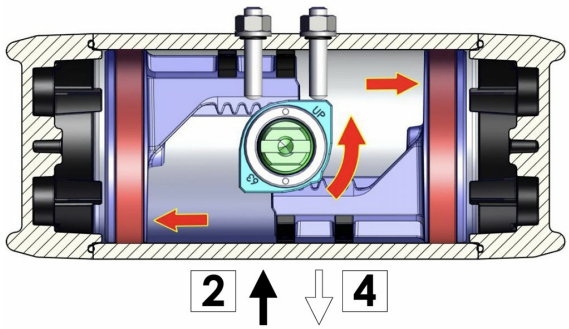

WORKING PLANE

Supplying air through the air connection 4, the pistons move towards the center and shaft rotate in a clockwise direction.
The above drawing shows the final position.

WORKING PLANE

Supplying air through the air connection 2, the pistons move outwards the center and shaft rotate in a counter-clockwise direction.
The above drawing shows the final position.

INSTRUCTIONS FOR ADJUSTING THE STROKE OF THE DOUBLE ACTING ACTUATOR

OPENING ADJUSTMENT

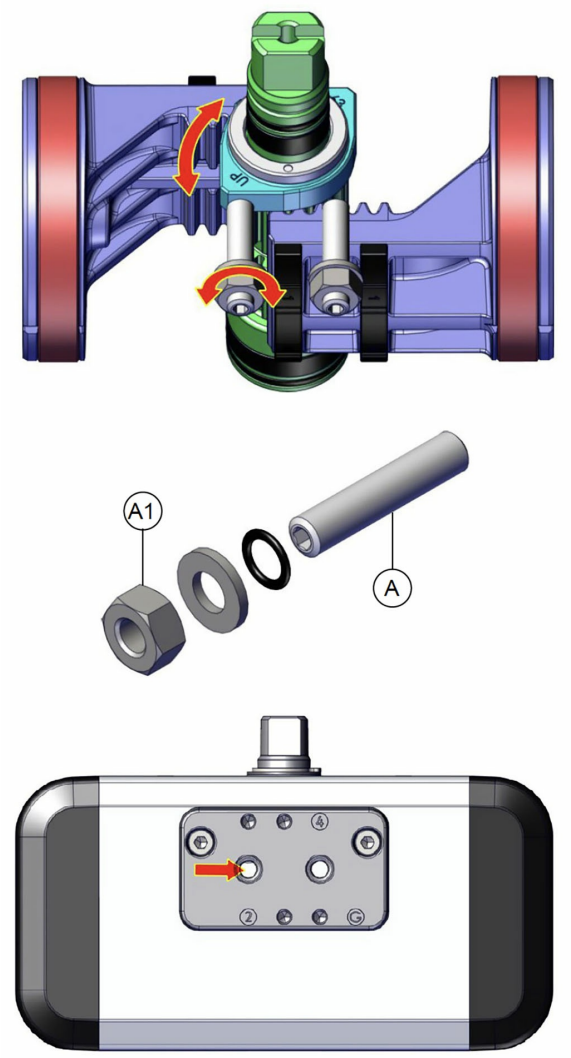

OMAL S.p.A. Società Benefit
Headquarters: Via Ponte Nuovo 11, Rodengo Saiano (Brescia) Italy
Production site: Via Brognolo 12, Passirano (Brescia) Italy
Ph +39 0308900145 Fax +39 0308900423

CLOSING ADJUSTMENT

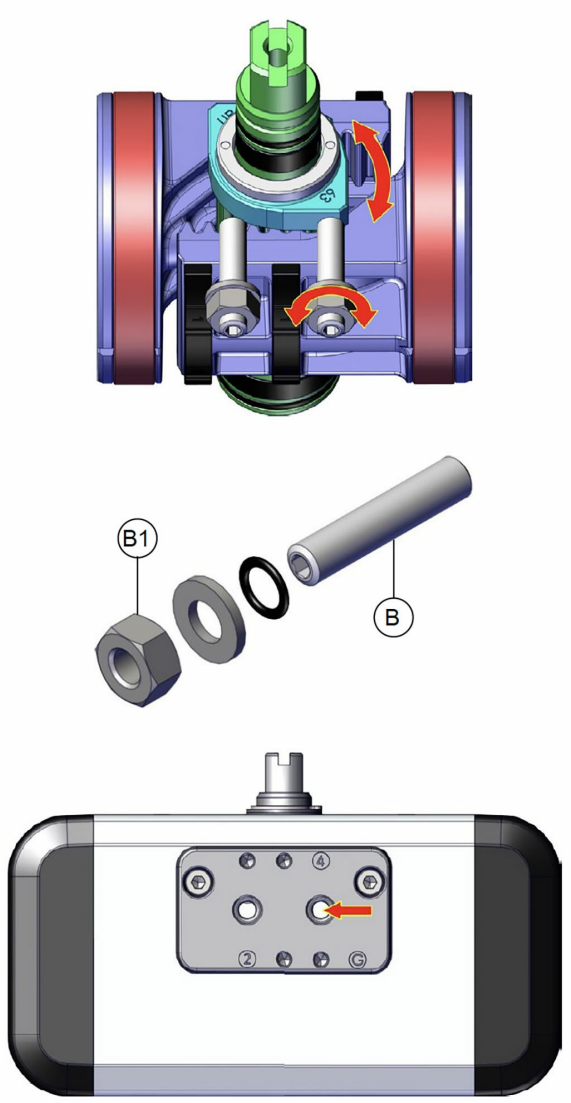

A) Check that there is no pressurized air in the actuator (in both chambers).
B) Loosen locknut A1.
C) Supply air to hole “2” (sufficient only for movement) the pistons will be in the end of stroke.
D) Screw or unscrew the screw A with an Allen key for the desired adjustment (maximum adjustment range ± 5°).
E) Once the adjustment has been made, with an Allen key stop the screw A, at the same time with a wrench tighten the locknut A1.

N.B. If necessary, repeat the operations until the desired setting is obtained.

A) Check that there is no pressurized air in the actuator (in both chambers).
B) Loosen locknut B1.
C) Supply air to hole “4” (sufficient only for movement) the pistons will be in the end of stroke.
D) Screw or unscrew the screw B with an Allen key for the desired adjustment (maximum adjustment range ± 5°).
E) Once the adjustment has been made, with an Allen key stop the screw B, at the same time with a wrench tighten the locknut B1.

N.B. If necessary, repeat the operations until the desired setting is obtained.

documents

Certificati

SIL3 IEC 61508 - RACKON
Grado di protezione involucri IP66-X7
Grado di protezione involucri IP 6X - IP X8
ATEX - Rack & Pinion pneumatic actuators

Manuali

Manuale istruzioni UMAAPRK0

Istruzioni

APRK1219 - Istruzioni Uso RACKON